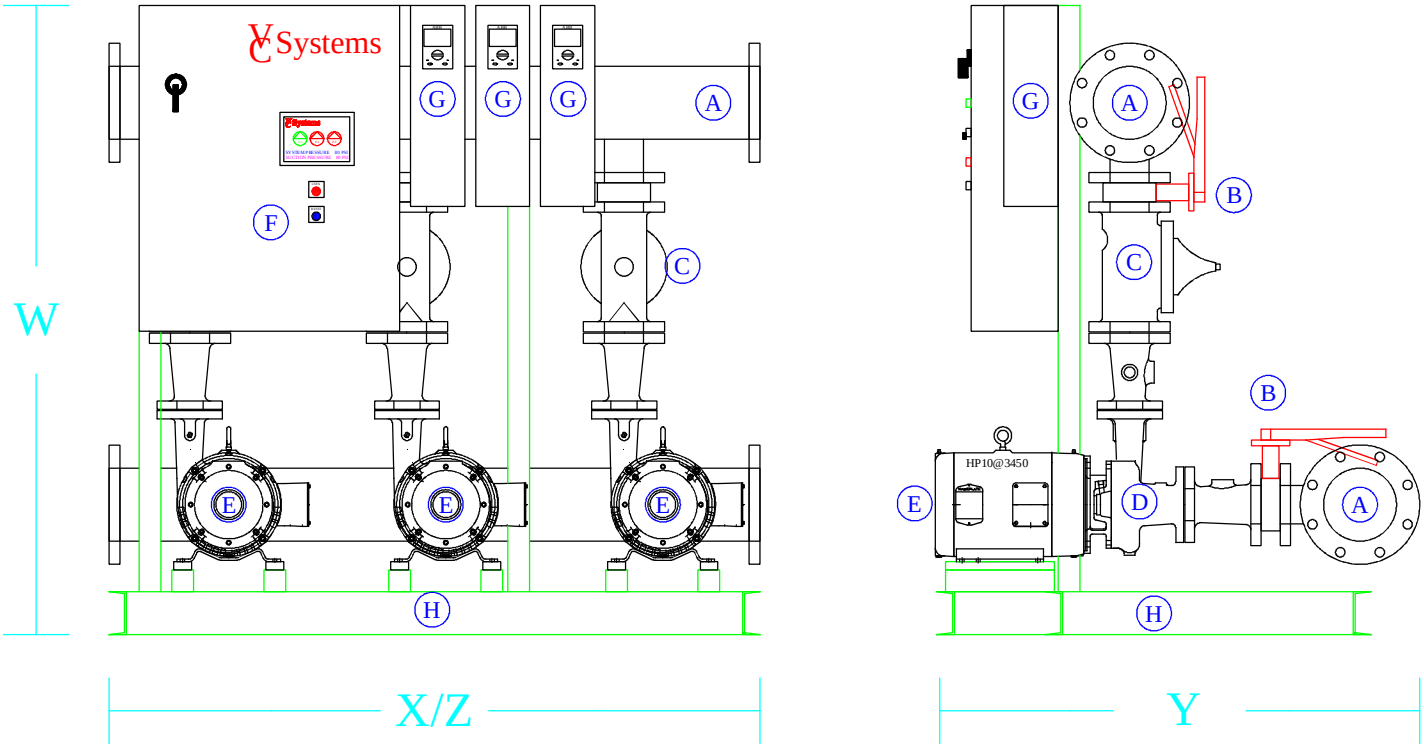

VC Systems

A	HEADER - 304 STAINLESS PIPE, FLANGED
B	ISOLATION VALVE, FULL LUG
C	CHECK VALVE, FLANGED
D	PUMP - VC ES SERIES - DI / SS FITTED
E	MOTOR
F	CONTROL PANEL - UL 508A LISTED
G	VARIABLE FREQUENCY DRIVE
H	CHANNEL STEEL BASE

KEY	HEADER	ESTIMATED WEIGHT	W	X	Y	Z
1	6"	1600 LBS	60"	60"	45"	60"
2	8"	1900 LBS	60"	60"	48"	60"
3						
4						
5						

Notes:

1. Not to be used for construction. Dimensions may vary. See factory for construction drawing.

2. Provide 18" clearance around the system for service and NEC clearance infront of control panel.

3. Headers are double ended for flow in either direction and fully supported from system base.

3H-6C-630